## 26700 RING PULL

SUS 316

Material: 316 Stainless Steel

Finish: Polished

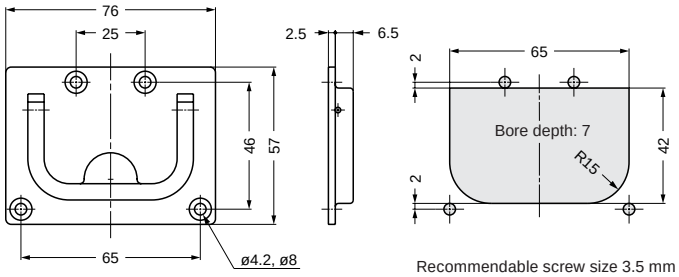


Recommendable screw size 3.5 mm

| Item No. | Weight (g) | Box (pcs) | Carton (pcs) |
|---|---|---|---|
| 26700 | 120 | 20 | 100 |

## 26900 RING PULL

SUS 316

Material: 316 Stainless Steel

Finish: Polished

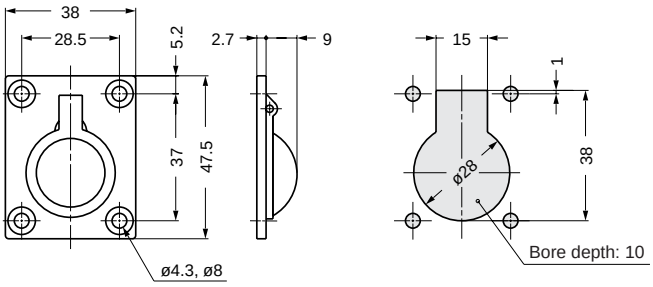


Recommendable screw size 3.5 mm

| Item No. | Weight (g) | Box (pcs) | Carton (pcs) |
|---|---|---|---|
| 26900 | 45 | 20 | 100 |

## 26901 RING PULL

SUS 316

Material: 316 Stainless Steel

Finish: Polished

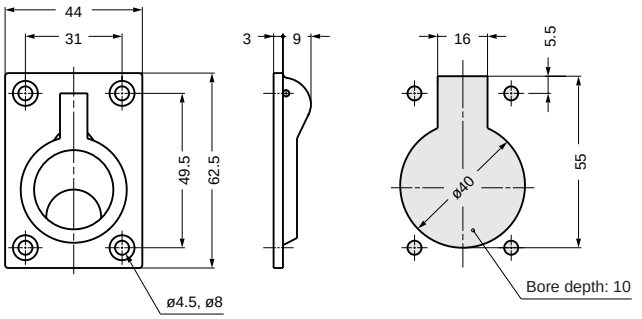


Recommendable screw size 3.5 mm

| Item No. | Weight (g) | Box (pcs) | Carton (pcs) |
|---|---|---|---|
| 26901 | 85 | 20 | 100 |